EST-H 7/700

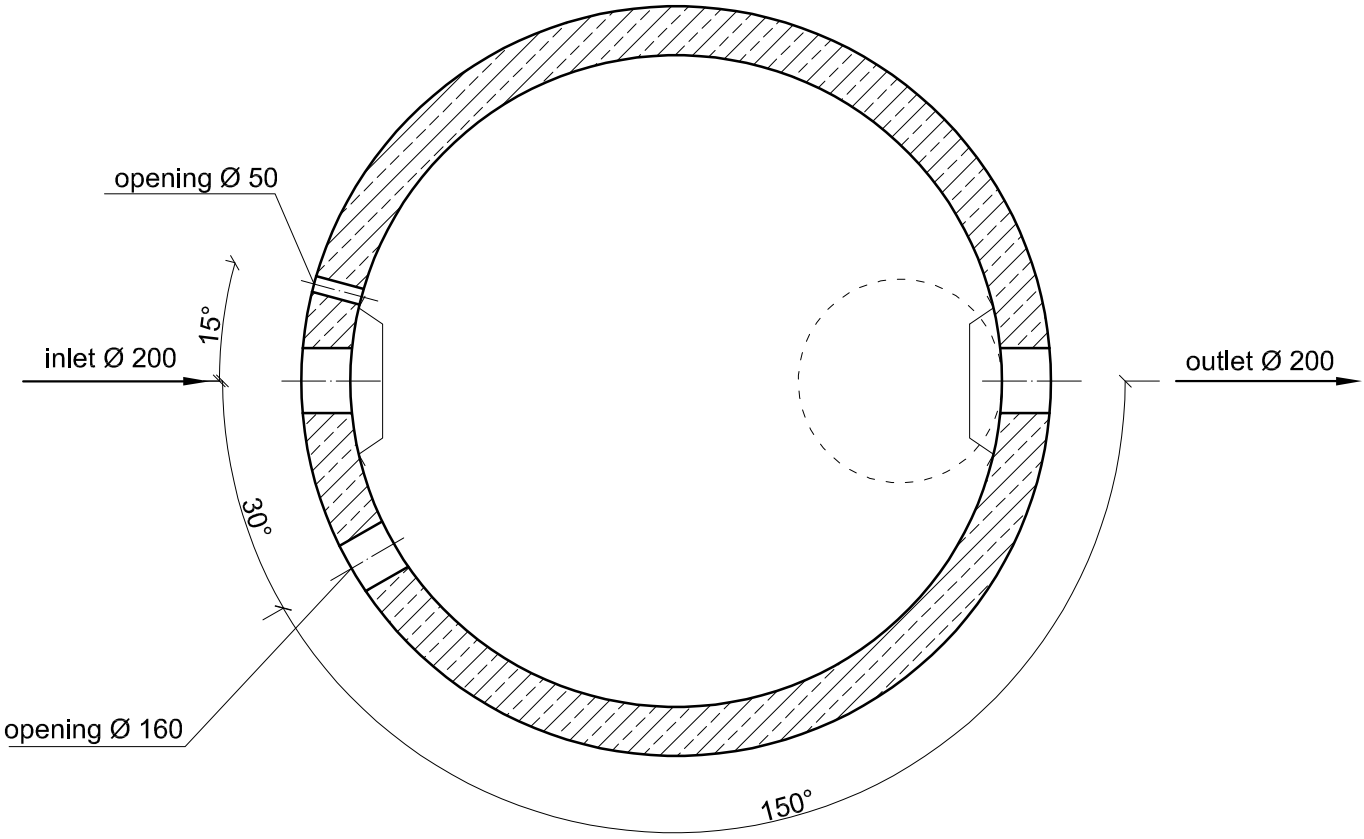

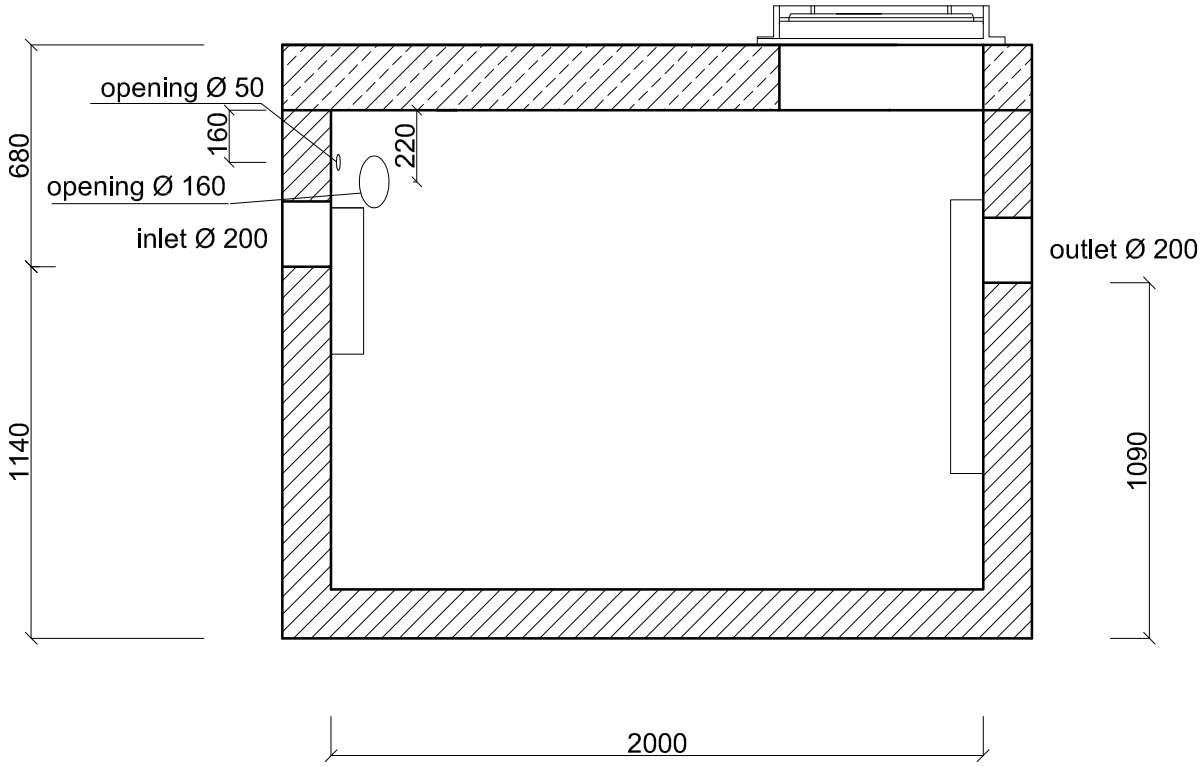

EST-H 7/700	DATE: 04.05.2026	ecol-unicon